FITTING INSTRUCTIONS

making everyday smoother

730225000003 V2.1

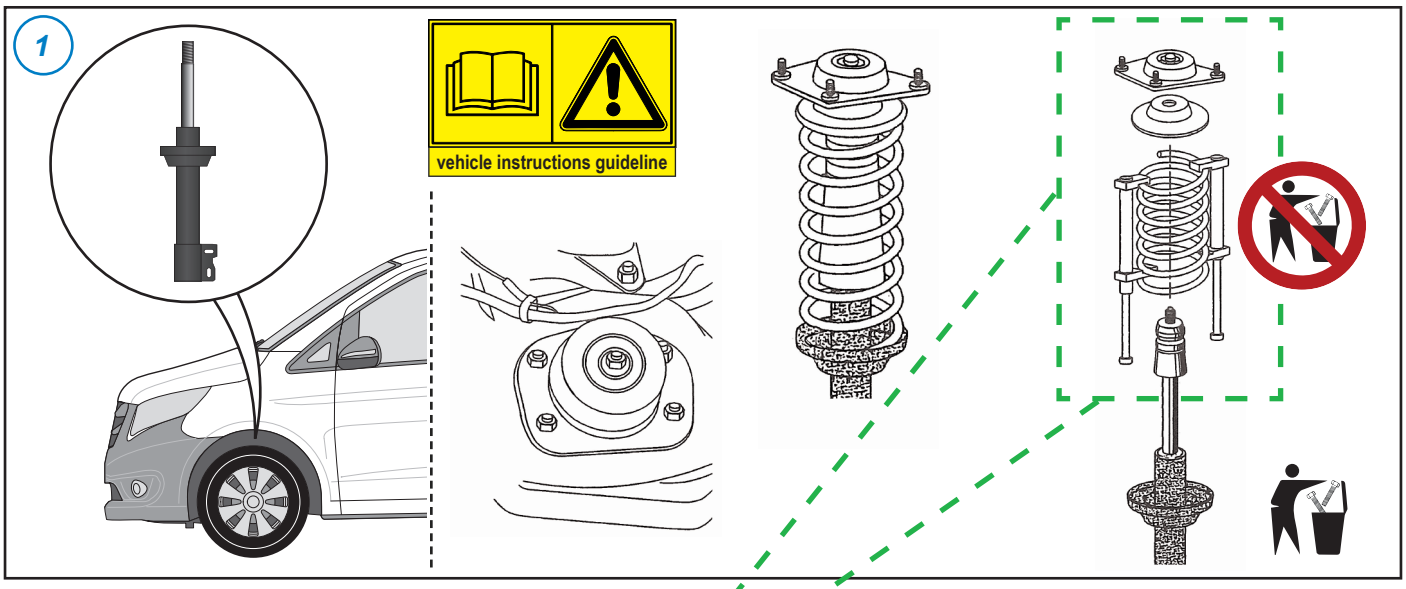

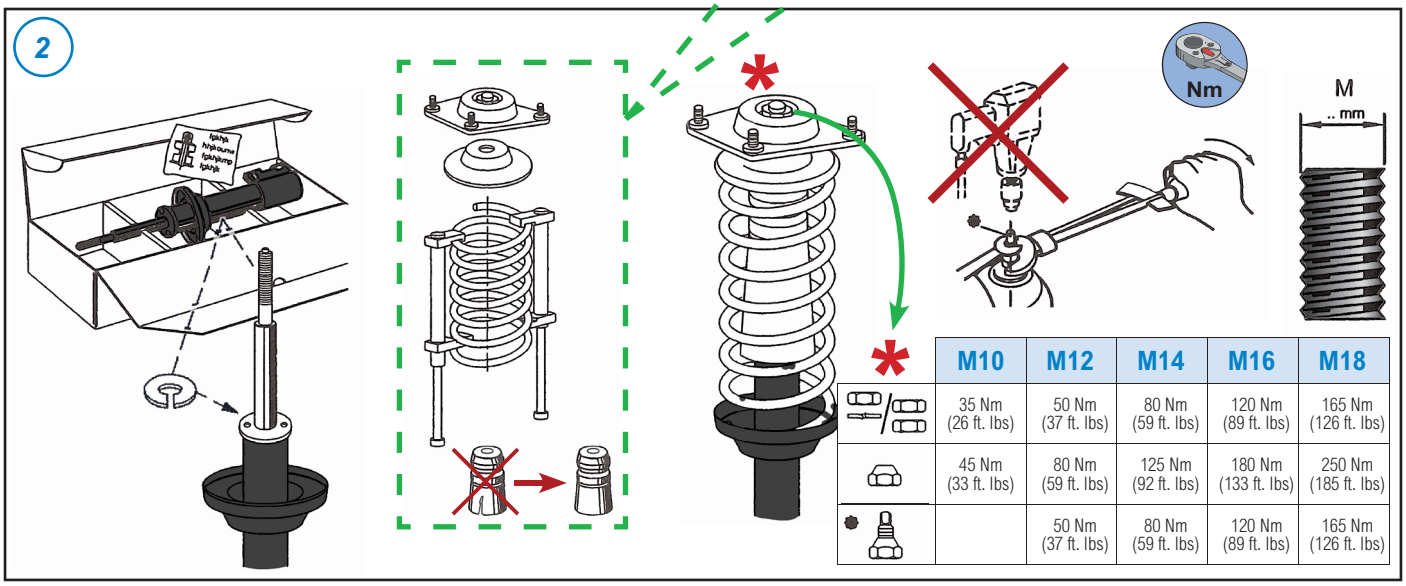
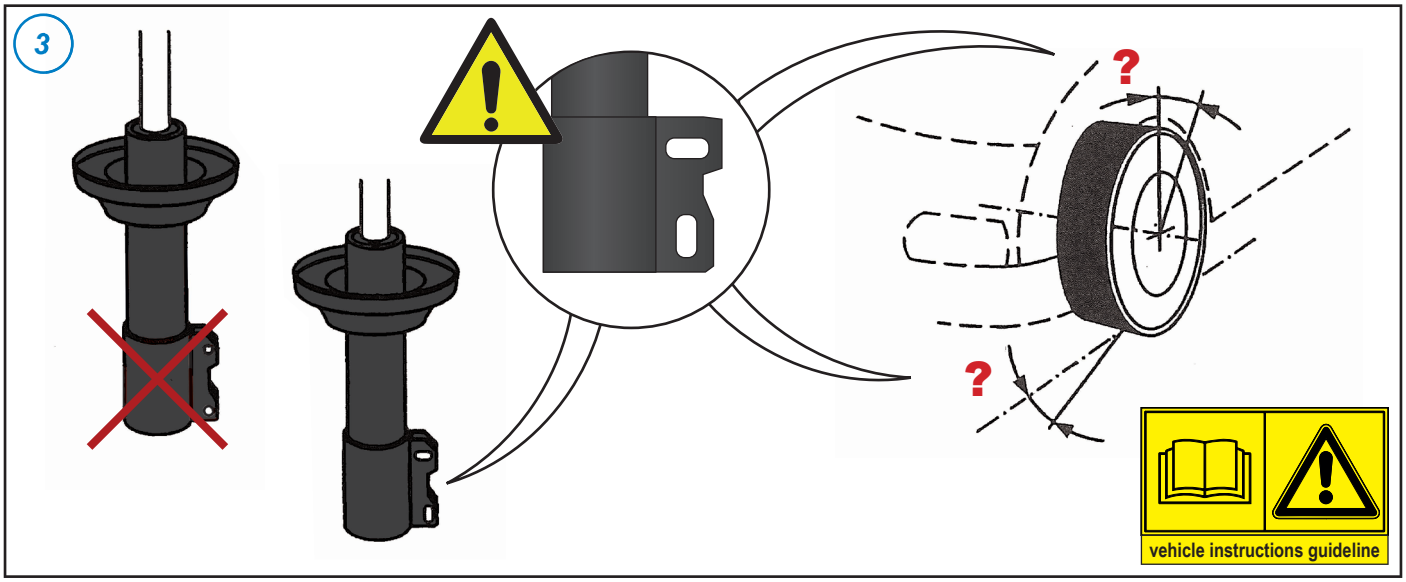
	M10	M12	M14	M16	M18
	35 Nm (26 ft. lbs)	50 Nm (37 ft. lbs)	80 Nm (59 ft. lbs)	120 Nm (89 ft. lbs)	165 Nm (126 ft. lbs)
	45 Nm (33 ft. lbs)	80 Nm (59 ft. lbs)	125 Nm (92 ft. lbs)	180 Nm (133 ft. lbs)	250 Nm (185 ft. lbs)
		50 Nm (37 ft. lbs)	80 Nm (59 ft. lbs)	120 Nm (89 ft. lbs)	165 Nm (126 ft. lbs)